Panasonic Broadcast
AJ-HD1700
Mechanical Parts List

Note:

1. *Be sure to make your orders of replacement parts according to this list.
2. Unless otherwise specified, all resistors are in OHMS, K=1,000 OHMS, all capacitors are in MICROFARADS (μF), P=μμF.
3. The P.C. Board untils marked with "■" shown below the main assembled parts.
4. The parts marked with Ⓔ on the exploded view show the electric parts.
5. IMPORTANT SAFETY NOTICE
   Components identified with the mark ⚠ have the special characteristics for safety. When replacing any of these components, use only the same type.
6. The marking (RTL) indicates the retention time is limited for this item.
   After the diacontinuation of this assembly in production, it will no longer be available.

CONTENTS

<<AJ-HD1700P/E/MC>>

SERVICING FIXTURES & TOOLS PRT-1
MECHANICAL CHASSIS ASSEMBLY (1) PRT-2
MECHANICAL CHASSIS ASSEMBLY (2) PRT-4
SUB CHASSIS ASSEMBLY PRT-6
FRONT LOADING ASSEMBLY PRT-8
FRONT PANEL ASSEMBLY PRT-10
REAR PANEL ASSEMBLY PRT-12
CHASSIS FRAME ASSEMBLY PRT-14
CASING PARTS ASSEMBLY PRT-16
PACKING PARTS ASSEMBLY PRT-18
ELECTRICAL REPLACEMENT PARTS LIST PRT-20

<<AJ-UC1700G>>

PACKING PARTS ASSEMBLY (AJ-UC1700G) PRT-92

SERVICING FIXTURES & TOOLS

Ref.No.	Part No.	Part Name & Description	Pcs	Remarks
1	VFK1145A	BACK TENSION METER	1	
2	VFK1149B	POST DRIVER	1	
3	VFK71A	DIAL TORQUE GAUGE	1	(1.5CN.M)
4	VFK1191A	DIAL TORQUE GAUGE	1	(0.45CN.M)
5	VFK1152	TORQUE GAUGE ADAPTOR	1	(45g)
6	VFK0357	ECCENTRIC SCREWDRIVER	1	(1.5MM)
7	VFK1154	POST HIGHT TOOL	1	
8	VFK1586	MECH. NEUTRAL PLATE (L)	1	FOR L CASSETTE
9	VFK1587	NEUTRAL POSITION TOOL	1	
10	VFK1588	NEUTRAL POSITION TOOL	1	
11	VFK1150A	NUT DRIVER (5.5MM)	1	
12	VFK1593	NUT DRIVER (4.5MM)	1	
13	VFK1188A	DIAL TENSION GAUGE	1	(300MN)
14	VFK0749	FROIRAL GREASE	1	
15	M0R265	MORLYTONE GREASE	1	
16	VFK0948A	CHECK LIGHT	1	
17	VFK1146A	PHILIPS DRIVER (FINE)	1	(00-75)
18	VFK1147A	SCREW DRIVER (FINE)	1	(00-100)
19	VFK1148A	HEX DRIVER (1.5MM)	1	
20	VFK1178A	HEX WRENCH (0.89)	1	
21	VFK1179A	HEX WRENCH (0.71)	1	
22	VFK1589	A/C HEAD FIXTURE	1	
23	VFK1209A	TORQUE DRIVER	1	(0.4-3KGF/CM)
24	VFK0912	TORQUE DRIVER ADAPTOR	1	(1.5MM)
25	VFK1300	A/D BOARD	1	(DAQ-12, QUATECH)
26	VFM3580KM	ALIGNMENT TAPE (NO.1)	1	OR VFM3580KL
27	VFM3581KM	ALIGNMENT TAPE (NO.2)	1	OR VFM3581KL
28	VFM3582KM	ALIGNMENT TAPE (NO.3)	1	OR VFM3582KL
29	VFM3380KM	DVCPRO 50 ALIGNMENT TAPE	1	FOR DVCPRO 50
30	VFM3010EDS	DV ALIGNMENT TAPE	1	(COLOR BARS)
31	VFM3000EDS	DV ALIGNMENT TAPE	1	(LISTA)
32	VFM3780KML	DVCPRO HD ALIGNMENT TAPE	1	FOR DVCPRO HD LP
33	VFM3781KML	DVCPRO HD ALIGNMENT TAPE	1	FOR DVCPRO HD LP
34	VFM3782KML	DVCPRO HD ALIGNMENT TAPE	1	FOR DVCPRO HD LP
35	VFM3783KML	DVCPRO HD ALIGNMENT TAPE	1	FOR DVCPRO HD SP
36	AJ-CL12MP	CLIEANING TAPE	1	
37	VFK1369	TAPE SENSOR ADJ CASSETTE	1	OR VFK1423
38	VFK1186	LISTA CABLE	1	
39	VFK1501	F EXTENDER BOARD	1	FOR F P.C.BOARD
40	VFK1502	H EXTENDER BOARD	1	FOR H P.C.BOARD
41	VFK1304A	FLASH MEMORY VERSION UP TOOL	1	
42	VZZ0095	CLEANING CLOTH	1	
43	VFK1590	C PLD WRITER	1	
44	VFK1782	LOOSING TOOL	1	

Ref.No.	Part No.	Part Name & Description	Pcs	Remarks

MECHANICAL CHASSIS ASSEMBLY(1)

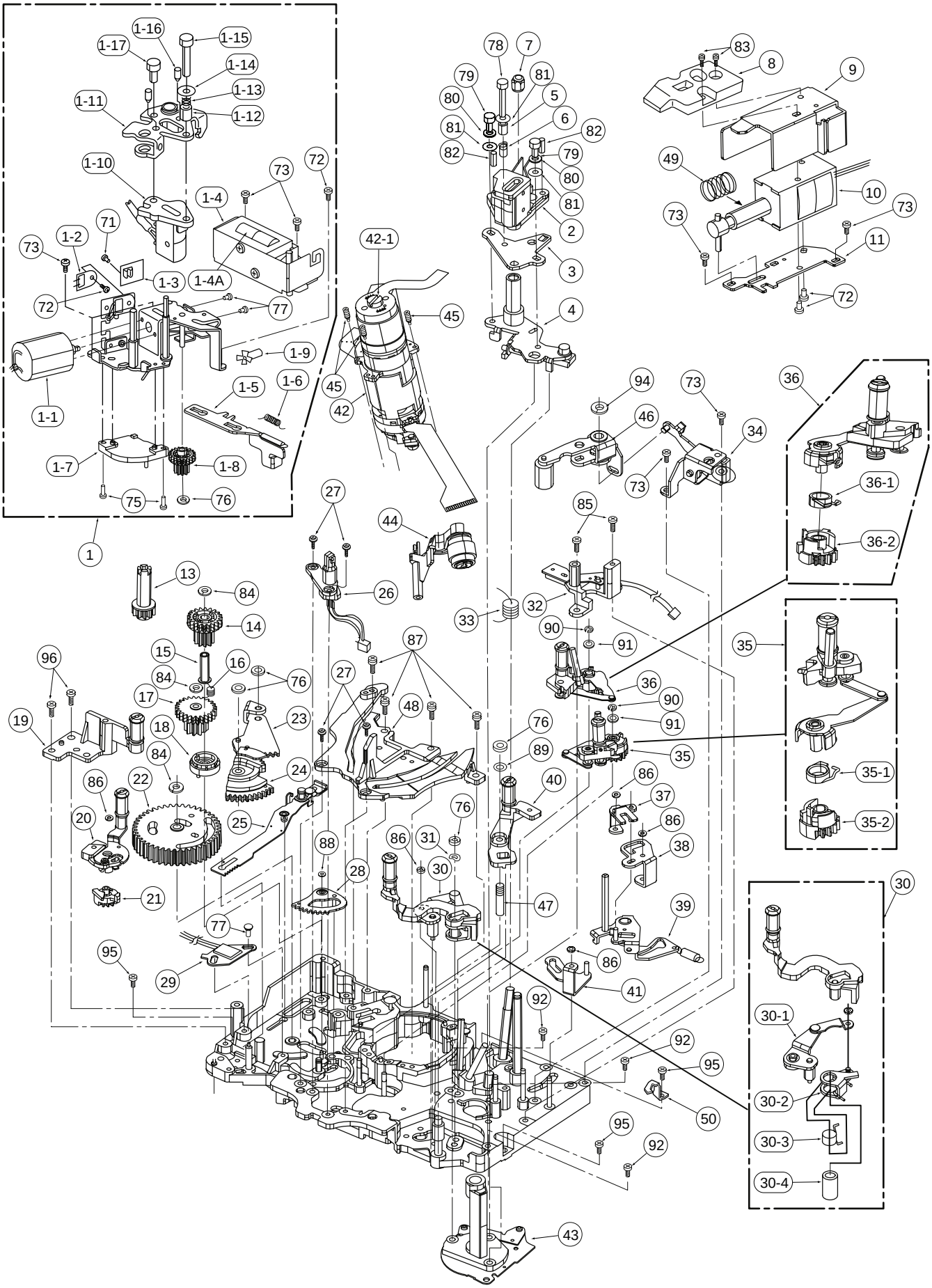

MECHANICAL CHASSIS ASSEMBLY (1)

Ref.No.	Part No.	Part Name & Description	Pcs	Remarks
1	VXA7041	MOTOR BRACKET	1	
1-1	VEM0726	MOTOR ASS'Y	1	(M)
1-2	VEK7927	INSULLATION SENSOR	1	EYHS77Y7
1-3	VEK8982	FG SENSOR	1	
1-4	VXA6656	CLEANER SOLENOID ASS'Y	1	
1-4A	VSJ0226	CLEANER SOLENOID	1	(M)
1-5	VMM0441	CLEANER ROD	1	
1-6	VMB3454	CLEANER SPRING	1	
1-7	VES0925	MODE SW ASS'Y	1	(M)
1-8	VDG1426	WORM WHEEL	1	
1-9	VXP2029	WORM	1	
1-10	VED0468	PRE CTL HEAD 1 ASS'Y	1	(M)
1-11	VXA6737	PRE CTL HOLDER ASS'Y	1	
1-12	VMS5987	AZIMUTH SLEEVE	1	
1-13	VMB2937	A/C HEAD ADJUST SPRING	1	
1-14	XWG2	WASHER	1	
1-15	XVE2B10FP	SCREW	1	
1-16	XXE2A6FP	HEX SCREW	1	
1-17	XVE2B6FP	HEX SCREW	1	
2	VED0466	A/C HEAD 1 ASS'Y	1	(M)
3	VMA0F40	HORIZONTAL FIX BASE	1	
4	VXA6658	HIGHT FIX BASE	1	
5	VMS5987	AZIMUTH SLEEVE	1	
6	VMB2937	A/C HEAD ADJUST SPRING	1	
7	VHD0045	NYLON NUT	1	
8	VMA0F93	CABLE GUIDE	1	
9	VMA0E98	SOLENOIDE ANGLE	1	
10	VSJ0227	PINCH SOLENOID	1	(M)
11	VMA0E90	SOLENOID BASE	1	
13	VDG1434	EM GEAR	1	
14	VDG1437	CAM CONNECTION GEAR B	1	
15	VMX2993	EM SLEEVE	1	
16	VMB3440	EM GEAR SPRING	1	
17	VDG1423	CAM CONNECTION GEAR A	1	
18	VXP2037	EMARGENCY CONNECTION GEAR	1	
19	VXA7523	S4 POST BASE ASS'Y	1	(M)
20	VXL3165	S TENSION ARM ASS'Y	1	(M)
21	VDG1438	TENSION LEG GEAR	1	
22	VDG1424	MAIN CAM GEAR	1	(M)
23	VXA6647	S LOAD SECTOR GEAR	1	
24	VDG1422	S CONNECTION GEAR	1	
25	VXA7558	EM ROD ASS'Y	1	
26	VEK8936	LED ASS'Y	1	
27	LMHD16064	SCREW	4	
28	VXA6700	TENSION LEG SECTOR GEAR	1	
29	VXA6644	TENSION SENSOR ASS'Y	1	
30	VXL3164	T5 ARM ASS'Y	1	(M)
30-1	VXL2989	T5 DRIVE LEVER A	1	
30-2	VXL2991	T5 DRIVE LEVER B	1	
30-3	VMB3436	T5 CHARGE SPRING	1	
30-4	VMX2982	T5 ARM SLEEVE	1	
31	VMB3418	T5 THRUST SPRING	1	
32	VMD3910	TENSION BASE	1	
33	VMB3434	A/C HIGHT SPRING	1	
34	VXA6703	PINCH ELEVATOR ASS'Y	1	
35	VXA7530	T LOADING ASS'Y	1	(M)
35-1	VMB3426	T-LOADING SPRING	1	
35-2	VDG1428	T-LOADING GEAR	1	
36	VXA7528	S LOADING ASS'Y	1	(M)
36-1	VMB3425	S LOADING SPRING	1	
36-2	VDG1427	S LOADING GEAR	1	
37	VXL3008	SOLENOID TURN ARM	1	
38	VML3520	SLENOID CONNECTION ARM	1	
39	VXL3002	PINCH TURN ARM	1	
40	VXL3163	T6 ARM ASS'Y	1	(M)
41	VXL3011	ELEVATOR DRIVE ASS'Y	1	
42	VEG1595	CYLINDER UNIT	1	(M)
42-1	VMD3885	CAP	1	
43	VEM0717	CAPSTAN ASS'Y	1	(M)
44	VXL3028	CLEANING ARM ASS'Y	1	(M)
45	VXQ0439	SCREW	3	
46	VXL3040	PINCH ARM ASS'Y	1	(M)
47	VMB3418	T5 THRUST SPRING	1	
48	VMD4544	LOADING SECTOR GEAR ASS'Y	1	

Ref.No.	Part No.	Part Name & Description	Pcs	Remarks
49	VMB2948	SPRING	1	
50	VMC1652	T PORT GUIDE	1	
71	XQN2+A3	SCREW	1	
72	XQN2+A2	SCREW	4	
73	XQN2+CF3	SCREW	7	
75	XQN2+A5	SCREW	2	
76	VMX0967	CUT WASHER	5	
77	XQN16+A2	SCREW	3	
78	XVE2B12FP	HEX SCREW	1	
79	XVE2B4FZ	HEX SCREW	2	
80	XWA2B	WASHER	2	
81	XWG2A5	WASHER	3	
82	XXE2A6FP	HEX SCREW	2	
83	XYN2+K5	SCREW	2	
84	VMX1599	CUT WASHER	3	
85	XQN2+CF4	SCREW	2	
86	VMX1061	WASHER	5	
87	XYN2+C6	SCREW	4	
88	VMX2027	CUT WASHER	1	
89	XWGV2Y4G	WASHER	1	
90	XUC12FP	E-RING	2	
91	XWGV15Z32G	WASHER	2	
92	XQN2+B3FZ	SCREW	3	
94	VMX0653	CUT WASHER	1	
95	XYN26+C5	SCREW	3	
96	XQN2+C4	SCREW	2	
*	VXY1749Z1	MECHANICAL CHASSIS ASS'Y	1	(M)

MECHANICAL CHASSIS ASSEMBLY(2)

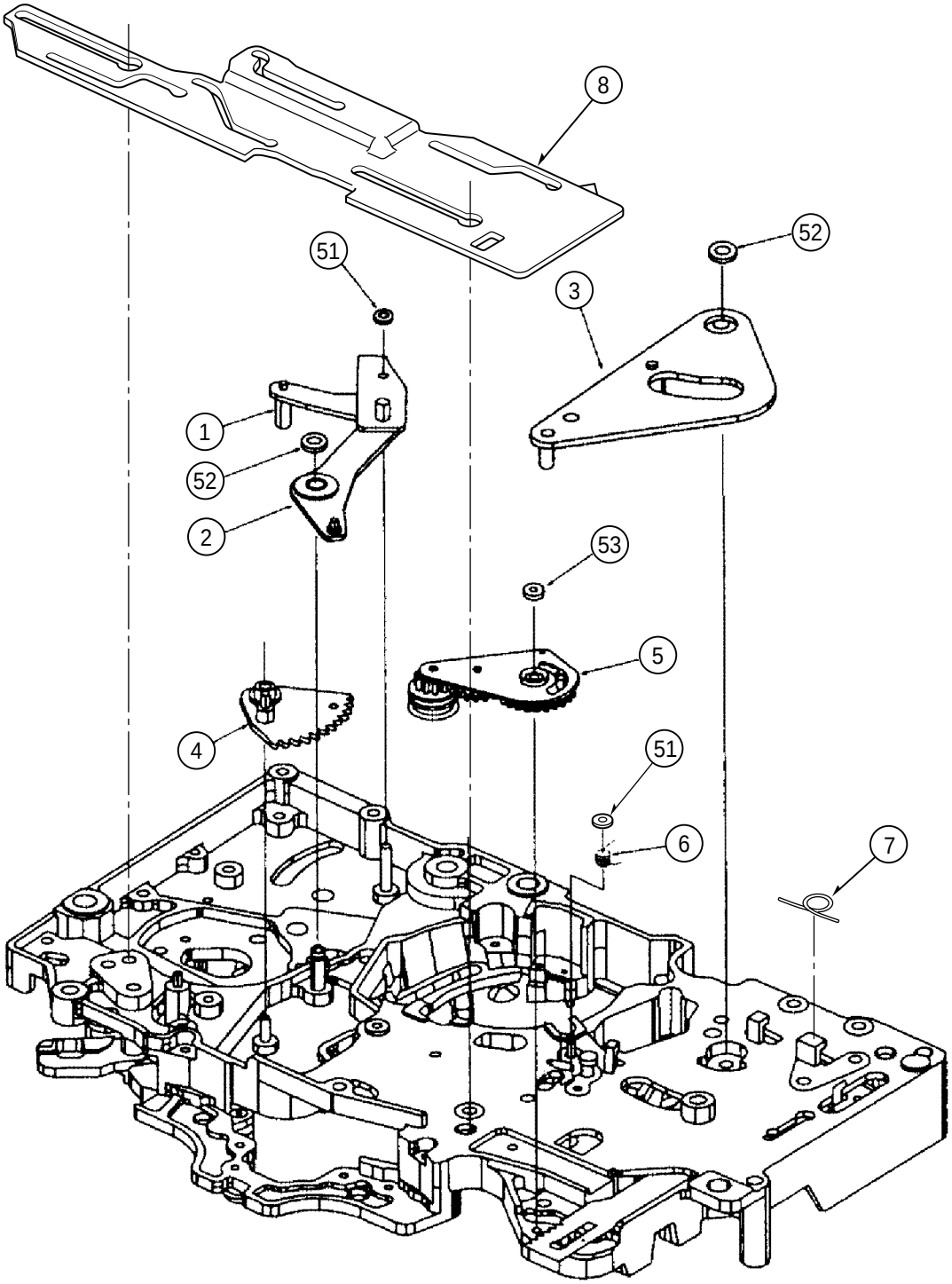

MECHANICAL CHASSIS ASSEMBLY (2)

Ref.No.	Part No.	Part Name & Description	Pcs	Remarks
1	VXL3007	PINCH DRIVE ARM	1	
2	VXL3010	CONNECTION ARM	1	
3	VXL3043	MAIN CAM ARM	1	
4	VXA6649	T ROD SECTOR GEAR	1	
5	VXL3238	IDLER ARM ASS'Y	1	
6	VMB3445	TENSION LEG SECTOR GEAR	1	
7	VMB3453	EM ROD SPRING	1	
8	VMA0E80	MAIN ROD	1	
51	VMX1061	WASHER	2	
52	VMX0967	CUT WASHER	2	
53	VMX2391	CUT WASHER	1	

Ref.No.	Part No.	Part Name & Description	Pcs	Remarks

SUB CHASSIS ASSEMBLY

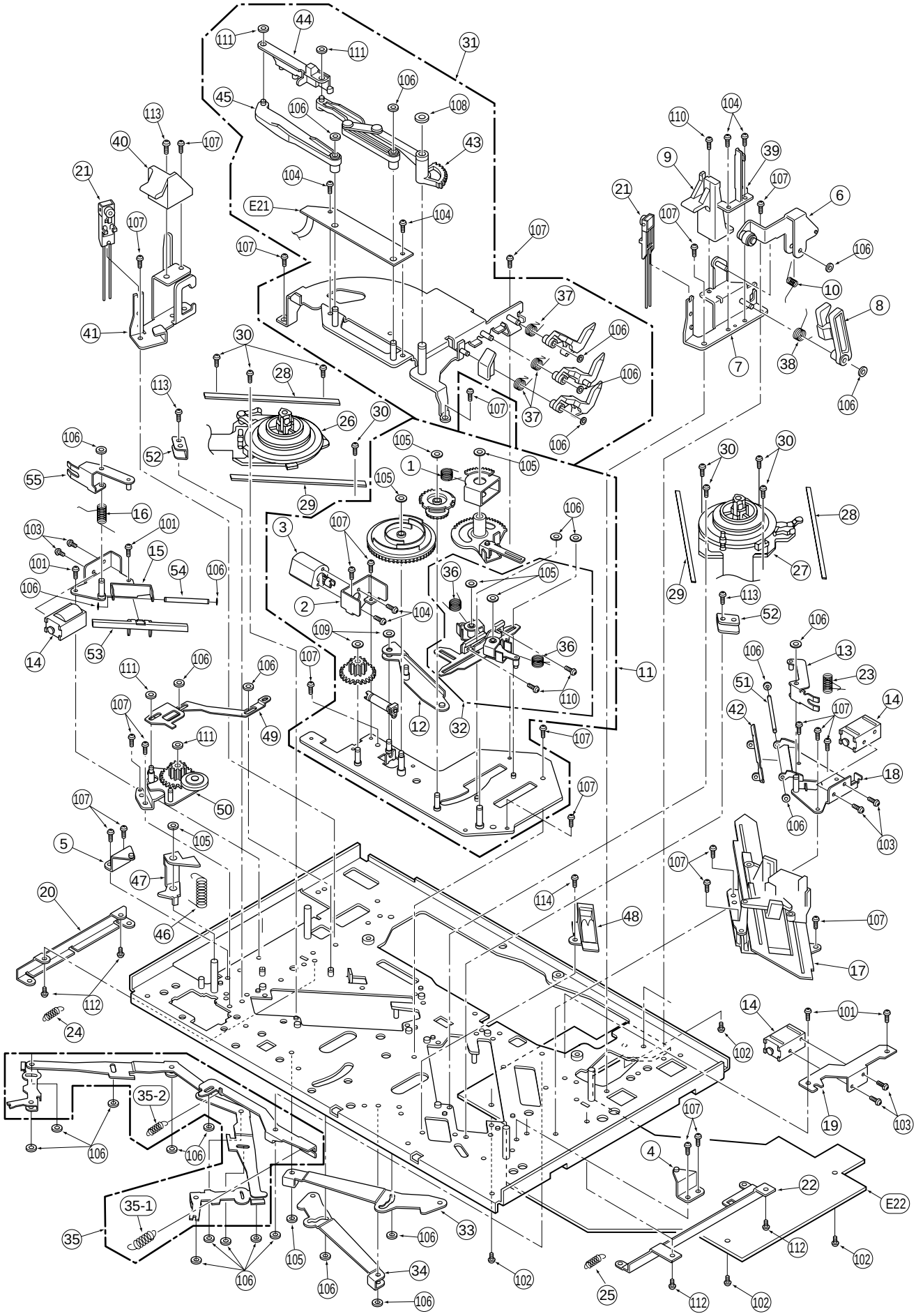

SUB CHASSIS ASSEMBLY

Ref.No.	Part No.	Part Name & Description	Pcs	Remarks
1	VMB3725	BACK CHARGE SPRING	1	
2	VMA0P68	REEL DRIVE MOTOR HOLDER	1	
3	VEM0777	REEL DRIVE MOTOR ASS'Y	1	(M)
4	VXA7557	SUPPORT ANGLE R ASS'Y	1	
5	VXA7556	SUPPORT ANGLE L ASS'Y	1	
6	VXL3167	M RID OPENER ASS'Y	1	
7	VXA7533	RID OPENER BASE R 1 ASS'Y	1	
8	VML3742	RELEASE LEVER	1	
9	VMD4793	L COVER OPENER BASE	1	
10	VMB3721	M OPENER SPRING	1	
11	VXA7770	REEL DRIVE ASS'Y	1	
12	VMB3724	MIC DRIVE RETURN SPRING	1	
13	VXL3181	T BRAKE ARM XL ASS'Y	1	
14	VSJ0216	SOLENOID	3	(M)
15	VXA7553	S BRAKE SOLENOID BASE ASS'Y	1	
16	VMB3729	S BRAKE SPRING	1	
17	VXA7772	MIC ASS'Y	1	(M)
18	VXA7555	T BRAKE SOLENOID BASE ASS'Y	1	
19	VMA0P66	REEL STOPPER SOLENOID BASE	1	
20	VMA0P75	MECHA I/F PLATE L	1	
21	VEK7692C	SENSOR HOLDER ASS'Y	2	
22	VMA0P76	MECHA I/F PLATE R	1	
23	VMB3730	T BRAKE SPRING	1	
24	VMB3743	STOPPER RETURN SPRING L	1	
25	VMB3744	STOPPER RETURN SPRING R	1	
26	VEM0718	S REEL MOTOR ASS'Y	1	(M)
27	VEM0730	T REEL MOTOR ASS'Y	1	(M)
28	VMS5923	REEL OUTER RAIL	2	
29	VMS7285	RAIL XL (OUT)	2	
30	VHD0995	SCREW	8	
31	VXA7757	COVER ASS'Y	1	
32	VXA7542	SLIDE ROD ASS'Y	1	
33	VXL3175	S BASE DRIVE ARM	1	
34	VXL3176	T BASE DRIVE ARM	1	
35	VXL3169	REEL STOPPER ASS'Y	1	
35-1	VMB3772	STOPPER RETURN SPRING A	1	
35-2	VMB3773	STOPPER RETURN SPRING B	1	
36	VMB3723	REEL CHARGE SPRING	2	
37	VMB3727	REEL LOCK RELEASE SPRING	3	
38	VMB3720	RELEASE LEVER SPRING	1	
39	VMA0P62	SUB STOPPER	1	
40	VML3741	RID OPENER L	1	
41	VMA0P60	RID OPENER BASE L	1	
42	VML3763	T BRAKE RELEASE ARM XL	1	
43	VXA7551	BACK 1 ASS'Y	1	
44	VMD4794	BACK BASE	1	
45	VXL3178	BACK ARM L ASS'Y	1	
46	VMB3728	BACK RETURN SPRING	1	
47	VXL3179	BACK STOPPER ARM ASS'Y	1	
48	VMD4795	FLEX. GUIDE	1	
49	VMM0461	EE ROD	1	
50	VXA7534	EE BASE ASS'Y	1	
51	VMS7277	T BRAKE RELEASE ARM SHAFT	1	
52	VMZ3337	REEL FLEX COVER	2	
53	VML3761	S BRAKE RELEASE ARM XL	1	
54	VMS7275	S BRAKE RELEASE ARM SHAFT	1	
55	VXL3180	S BRAKE ARM XL ASS'Y	1	
101	XQN2+CF4	SCREW	4	
102	XYN26+F5	SCREW	4	
103	XQN2+A15	SCREW	6	
104	XQN2+A2	SCREW	6	
105	VMX1079	CUT WASHER	7	
106	VMX0967	CUT WASHER	30	
107	XQN2+CF3	SCREW	24	
108	VMX0653	CUT WASHER	1	
109	VMX1548	CUT WASHER	2	
110	LMHD16064	SCREW	3	
111	VMX1061	WASHER	4	
112	XYN26+K4	SCREW	4	
113	XYN2+C4	SCREW	3	
114	XYN2+K5	SCREW	1	

Ref.No.	Part No.	Part Name & Description	Pcs	Remarks
E21	VEP80C69A	REEL SENSOR P.C.BOARD	1	
E22	VEP82243A	MECHA I/F P.C.BOARD	1	

SLOT-IN UNIT ASSEMBLY

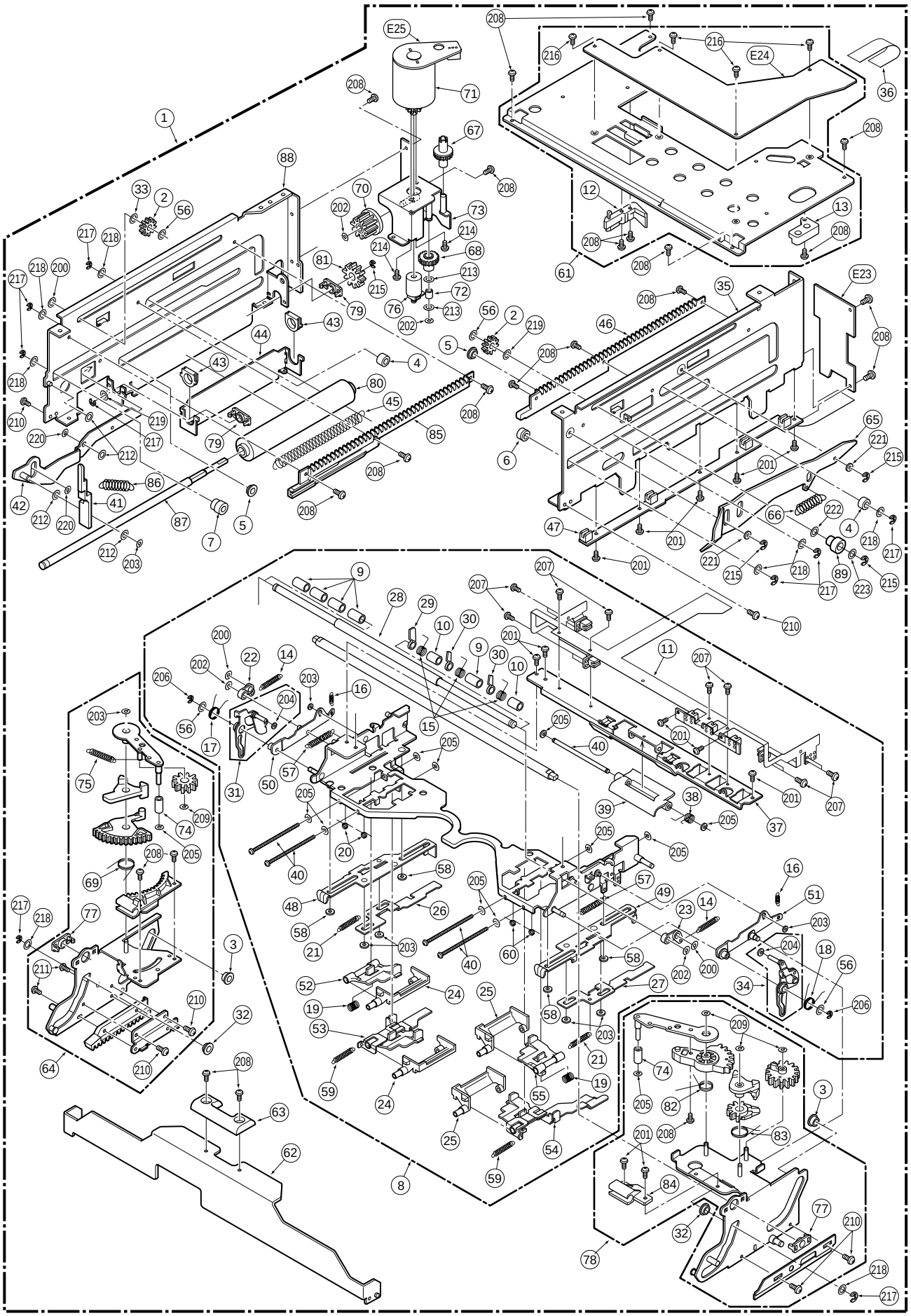

SLOT-IN UNIT ASSEMBLY

Ref.No.	Part No.	Part Name & Description	Pcs	Remarks
1	VXA7737	CASSETTE COMPARTMENT	1	(M)
2	VDG1579	MAIN SHAFT GEAR	2	
3	VDP1842	HOLDER LIMIT ROLLER	2	
4	VDP1843	HOLDER ROLLER	2	
5	VDP1845	CASSETTE HOLDER ROLLER S	2	
6	VDP1846	CASSETTE HOLDER ROLLER L	1	
7	VDP1851	BLINDER DRIVE ROLLER	1	
8	VXA7738	CASSETTE HOLDER ASS'Y	1	
9	VDP1839	HOLD ROLLER STAND	5	
10	VDP1840	HOLD ROLLER S	2	
11	VEK9937	HOLDER FLEX. ASS'Y	1	
12	VMD4791	KICK OFF LEVER STOPPER L	1	
13	VMD4792	KICK OFF LEVER STOPPER R	1	
14	VMB3769	CASSETTE HOLD SPRING A	2	
15	VMB3700	CASSETTE DETECT SPRING	3	
16	VMB3701	CHARGE SPRING	2	
17	VMB3702	SUPPORT HOLD SPRING L	1	
18	VMB3703	SUPPORT HOLD SPRING R	1	
19	VMB3705	L RID LOCK SPRING	2	
20	VMB3706	M GUIDE SPRING	2	
21	VMB3707	XL RID SPRING	2	
22	VML3723	CASSETTE HOLD LEVER L	1	
23	VML3724	CASSETTE HOLD LEVER R	1	
24	VML3726	M GUIDE L	2	
25	VML3727	M GUIDE R	2	
26	VMM0450	XL DETECT ROD L	1	
27	VMM0452	XL DETECT ROD R	1	
28	VMS7227	PRESSURE ROLLER AXIS	1	
29	VMX3263	ADAPTOR DETECT LEVER	1	
30	VMX3264	L/M DETECT LEVER	2	
31	VXA7563	SUPPORT HOLD L ASS'Y	1	
32	VDP1841	CHARGE ROLLER	2	
33	XWGV26Z5G	WASHER	1	
34	VXA7564	SUPPORT HOLD R ASS'Y	1	
35	VXA7580	SIDE PLATE R1 ASS'Y	1	
36	VWJ20C2050L0	FLEX. CABLE	1	
37	VMA0P44	HOLDER ANGLE	1	
38	VMB3704	SPRING	1	
39	VML3725	LEVER	1	
40	VMS6108	KICK OFF ROD SHAFT	5	
41	VML3765	OPENER ARM	1	
42	VXL3200	BLINDER DRIVE ARM 1 ASS'Y	1	
43	VDB1683	MOVE BEARING	2	
44	VMA0P51	EJECT CHARGE PLATE	1	
45	VMB3714	EJECT CHARGE SPRING	1	
46	VDG1592	MAIN SHAFT LUCK R	1	
47	VEK9938	SIDE FLEX. ASS'Y	1	
48	VXA7567	SUB HOLDER L ASS'Y	1	
49	VXA7568	SUB HOLDER R ASS'Y	1	
50	VXL3182	CHARGE LEVER L ASS'Y	1	
51	VXL3183	CHARGE LEVER R ASS'Y	1	
52	VXL3234	L RID LOCK RELEASE L ASSY	1	
53	VXL3235	M RID LOCK RELEASE L ASSY	1	
54	VXL3236	L RID LOCK RELEASE R ASSY	1	
55	VXL3237	M RID LOCK RELEASE R ASSY	1	
56	XWGV4Z7G	POLYSLIDER W	4	
57	VMB3709	SUB HOLDER SPRING	2	
58	VMX0967	CUT WASHER	4	
59	VMB3708	M RID LOCK SPRING	2	
60	VMB3749	M GUIDE SPRING R	2	
61	VXA7581	TOP PLATE ASS'Y	1	
62	VMA0P46	FRONT GUIDE ANGLE	1	
63	VML3766	FRONT GUIDE	1	
64	VXA7570	ELEVATOR PLATE L ASS'Y	1	
65	VMA0P54	MOVE LEVER	1	
66	VMB3716	MOVE LEVER SPRING	1	
67	VDG1589	EMERGENCY GEAR	1	
68	VDG1590	MOTOR CONNECTION GEAR	1	
69	VMB3711	KICK OFF RETURN SPRING L	1	
70	VDG1591	WORM WHEEL	1	
71	VEM0778	SLOT IN MOTOR ASS'Y	1	(M)
72	VMB3715	EMERGENCY SPRING	1	
73	VXA7578	MOTOR BRACKET 1 ASS'Y	1	
74	VDP1844	KICK OFF ROLLER	2	

Ref.No.	Part No.	Part Name & Description	Pcs	Remarks
75	VMB3710	ARM RETURN SPRING L	1	
76	VXP2250	MOTOR WORM ASS'Y	1	
77	VDB1395	MAIN SHAFT ANGLE	2	
78	VXA7739	ELEVATOR PLATE R ASS'Y	1	
79	VDB1682	FIX BEARING	2	
80	VDG1577	SLOT IN STAND WORM	1	
81	VDG1587	SLOT IN WORM SHAFT GEAR	1	
82	VMB3712	ARM RETURN SPRING R	1	
83	VMB3713	KICK OFF RETURN SPRING R	1	
84	VMD4790	ELEVATOR HOLD PIECE	1	
85	VDG1588	FIX LACK L	1	
86	VMB3731	RETURN SPRING	1	
87	VMS7240	WORM SHAFT	1	
88	VXA7575	SIDE PLATE L 1 ASS'Y	1	
89	VDP1861	MAIN SHAFT COLOR B	1	
200	VMX1079	CUT WASHER	3	
201	LMHD16064	SCREW	12	
202	VMX0653	CUT WASHER	4	
203	VMX0967	CUT WASHER	8	
204	VMX2391	CUT WASHER	2	
205	VMX1061	WASHER	12	
206	XUC2FP	E-RING	2	
207	XQN16+A3	SCREW	8	
208	XYN2+C4	SCREW	22	
209	VMX1599	CUT WASHER	4	
210	XQN2+A3	SCREW	6	
211	XYN2+C6	SCREW	2	
212	XWGV2Y4G	WASHER	4	
213	XWGV3Y6G	WASHER	2	
214	XYN3+K4	SCREW	2	
215	XUC15FP	E-RING	4	
216	XYN2+C4	SCREW	4	
217	XUC25FP	E-RING	9	
218	XWGV3Y8G	WASHER	8	
219	XWGV3Z6G	WASHER	2	
220	VMX0967	CUT WASHER	2	
221	XWGV2D6G	WASHER	2	
222	XWGV3D6G	WASHER	1	
223	XWGV2Y5G	WASHER	1	
E23	VEP80C65A	SLOT IN P.C.BOARD	1	
E24	VEP80C66A	TOP PLATE P.C.BOARD	1	
E25	VEP80C68A	MONITOR P.C.BOARD	1	

FRONT PANEL ASSEMBLY

Components identified with the mark ⚠ have the special characteristics for safety.
When replacing any of these components, use only the same type.

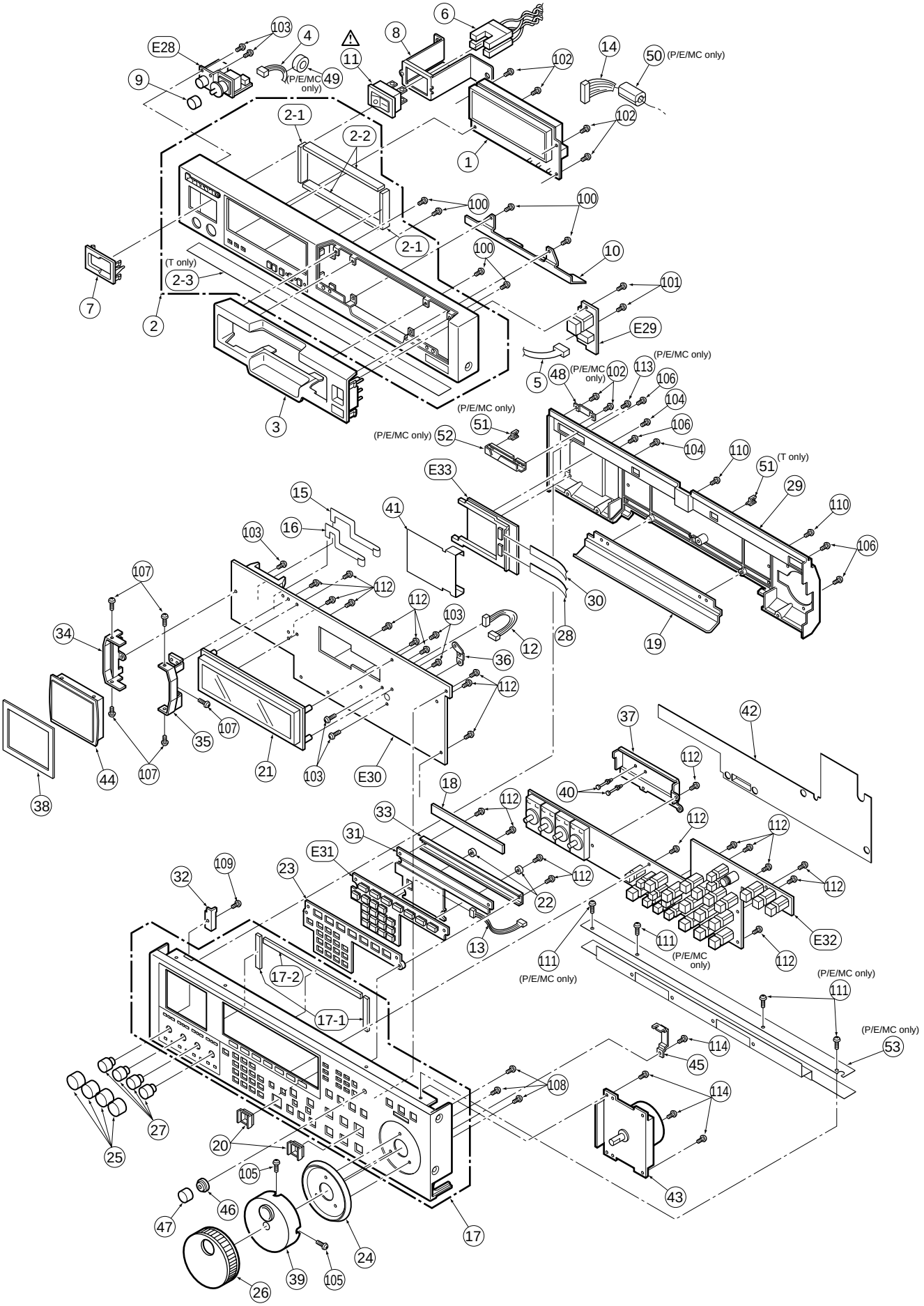

FRONT PANEL ASSEMBLY

Components identified with the mark ⚠ have the special characterisitics for safety.
When replacing any of these components, use onlly the same type.

Ref.No.	Part No.	Part Name & Description	Pcs	Remarks
1	A2BD00000055	DISPLAY	1	
2	VYP8846	UPPER FRONT PANEL 1 ASS'Y	1	
2-1	VGF0941	DUST PROOF (SIDE)	2	
2-2	VGF0955	DUST PROOF (UPPER)	2	
3	VYP8687	CASSETTE INSERT PIECE	1	
4	VEE0W78	CONNECTION CABLE	1	
5	VEE0W79	EJECT CONNECTION CABLE	1	
6	VEE0X33	POWER AC CABLE	1	
7	VGQ6970	POWER SW COVER	1	
8	VMP7419	POWER SW ANGLE	1	
9	VGU5334	LEVER VR KNOB	1	
10	VJF1475	HARNESS SHEET	1	
⚠ 11	K0AAKE000064	POWER SW	1	
12	VEE0W75	DISPLAY POWER CABLE	1	
13	VEE0W76	TENKEY CONNECTION CABLE	1	
14	VEE0W77	AUDIO METER DISPLAY CABLE	1	
15	VWJ1423	MONITOR FLEX. A	1	
16	VWJ1424	MONITOR FLEX. B	1	
17	VYP8839	FRONT LOWER PANEL 1 ASS'Y	1	
17-1	VGF0941	DUST PROOF CUSHION (SIDE)	2	
17-2	VGF0939	DUST PROOF CUSHION(LOWER)	1	
18	VGF0939	DUST PROOF CUSHION(LOWER)	1	
19	VGM1885	ACCESSORY PLATE	1	
20	VGQ0974	SW GUARD	2	
21	A2BC00000049	DISPLAY	1	
22	VGQ3340	P.C.B. HOLD SPACER	2	
23	VGQ6972	OPERATION BUTTON FRAME	1	
24	VGQ7463	DIAL BASE	1	
25	VGU5333	ADJUST RUBBER COVER	4	
26	VGU5780	SEARCH DIAL COVER	1	
27	VGU9243	REC VR KNOB	4	
28	VWJ20E5155A0	MEM CARD FFC 1	1	
29	VKU0593	BACK COVER	1	
30	VWJ40E5110A0	MEM CARD FFC 2	1	
31	VMG1477	OPERATION BUTTON	1	
32	VMP7409	REC VR HOLD ANGLE	1	
33	VMP7412	P.C.B. HOLD ANGLE	1	
34	VMP7413	LCD HOLDER ANGLE (L)	1	
35	VMP7414	LCD HOLDER ANGLE (R)	1	
36	VMP7415	BACK COVER HOLDER ANGLE	1	
37	VMP7429	REC VR BACK UP ANGLE	1	
38	VGF0942	LCD CUSHION A	1	
39	VXU1087	SEARCH DIAL BUSH ASS'Y	1	
40	VMX2233	SPACER	2	
41	VMZ3239	IC CARD P.C.B. COVER (PC)	1	
42	VMZ3306	INSULATION SHEET	1	
43	VSR0112	JOG SEARCH DIAL	1	
44	VYK9546-S	LCD ASS'Y	1	(M)
45	VMP7410	SW P.C.B. BACK UP ANGLE	1	
46	VGU6484	KNOB	1	
47	VGU9107K	KNOB ACCESSORY	1	
48	VMP7800	CABLE HOLD ANGLE	1	
49	J0KE00000059	FERRITE CORE	1	
50	J0KG00000011	FERRITE CORE	1	
51	VJF0285	WIRE LOCKING SADDLE	1	
52	VMP7799	CABLE HOLDER ANGLE (B)	1	
53	VMP7798	EARTH SHEET HOLDER ANGLE	1	
100	XTB2+6GFZ	SCREW	6	
101	XTV3+6GFZ	SCREW	2	
102	XTV3+6F	SCREW	6	
103	XYN3+K6	SCREW	7	
104	XYN2+C8FZ	SCREW	2	
105	XSN3+6	SCREW	2	
106	XSB4+6FZ	SCREW	4	
107	XQN16+A25FZ	SCREW	5	
108	XTB2+5GFZ	SCREW	3	
109	XYN3+C6FRS	SCREW	1	
110	XTV3+8FFZ	SCREW	2	
111	XSB26+5	SCREW	4	
112	XYN3+K6RS	SCREW	22	
113	XSB3+6	SCREW	1	

Ref.No.	Part No.	Part Name & Description	Pcs	Remarks
114	XYN4+J8FN	SCREW	4	
E28	VEP80C29B	UP FRONT 1 P.C.BOARD	1	
E29	VEP80C30A	UP FRONT 2 P.C.BOARD	1	
E30	VEP86319B	FRONT CPU P.C.BOARD	1	
E31	VEP86321A	FRONT TENKEY P.C.BOARD	1	
E32	VEP86320A	FRONT SW P.C.BOARD	1	
E33	VEP86323A	MEMORY CARD P.C.BOARD	1	

REAR PANEL ASSEMBLY

Components identified with the mark ⚠ have the special characteristics for safety.
When replacing any of these components, use only the same type.

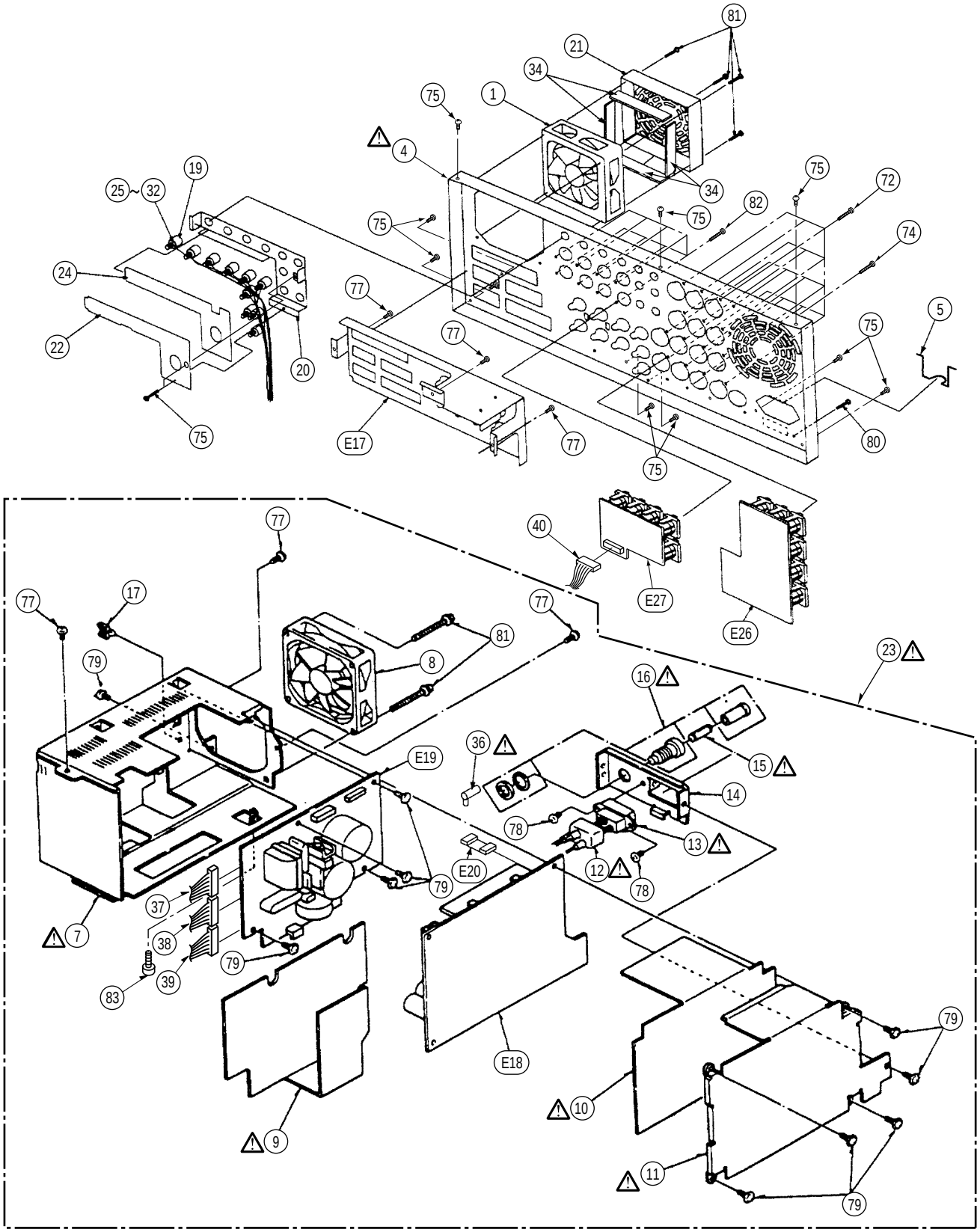

REAR PANEL ASSEMBLY

Components identified with the mark ⚠ have the special characterisitics for safety.
When replacing any of these components, use onlly the same type.

Ref.No.	Part No.	Part Name & Description	Pcs	Remarks
1	VRF0208	FAN MOTOR	1	L6FALEFH0006 (M)
⚠ 4	VJH1237	JACK PANEL	1	
5	VML2903	AC CORD HOOK	1	
⚠ 7	VSC5112	POWER CASE A	1	
8	VRF0208	FAN MOTOR	1	L6FALEFH0006 (M)
⚠ 9	VMZ3013	SHIELD SHEET A	1	
⚠ 10	VMZ3014	SHIELD SHEET B	1	
⚠ 11	VSC5318	POWER CASE B	1	
⚠ 12	VMZ1252	AC INLET COVER	1	
⚠ 13	VJP0083	AC INLET	1	
14	VMP4889	AC INLET BRACKET	1	
⚠ 15	VSF0106C50H	FUSE	1	
⚠ 16	K3GA1BJ00014	FUSE HOLDER	1	K3GA1BJ00013
17	VJF0285	WIRE LOCKING SADDLE	1	
19	VJS4132	CONNECTOR (FEMALE)	10	K1SMBDBA0001 K1SMBDBA0001
20	VMP6288	CABLE HOLDER BASE	1	
21	VGM1747	FAN COVER	1	
22	VMP6256	CABLE HOLDER ANGLE	1	
⚠ 23	VEK0E62	POWER ASS'Y	1	
24	VMT1093	CABLE RUBBER	1	
25	VEE0E12720	SDI CABLE (BLACK)	1	
26	VEE0E15740	CABLE 9 (GREEN)	1	
27	VEE0E49740	SDI CABLE (YELLOW)	1	
28	VEE0E14740	CABLE 8 (ORANGE)	1	
29	VEE0E47730	SDI CABLE (BROWN)	1	
30	VEE0E46760	SDI CABLE (GRAY)	1	
31	VEE0E48570	SDI CABLE (BLUE)	1	
32	VEE0E13570	SDI CABLE (RED)	1	
34	VMT1153	DUST PROOF RUBBER	4	
⚠ 36	VMZ2139	FUSE HOLDER COVER	1	
37	VEE0K23	POWER DC 1 CABLE	1	
38	VEE0C19	POWER DC 2 CABLE	1	
39	VEE0K31	POWER DC 3 CABLE	1	
40	VEE0K30	AES/EBU CABLE	1	
72	XSN26+6FZ	SCREW	14	
74	XTN26+6FFZ	SCREW	1	
75	XTV3+6F	SCREW	11	
77	XTV3+6FFR	SCREW	6	
78	XSB3+6FZ	SCREW	2	
79	XYN3+F8	SCREW	10	
80	XYE4+EF8	SCREW	1	
81	XYNV4+K35FCS	SCREW	6	
82	XTN3+10JFZ	SCREW	8	
83	XYN4+E6VW	SCREW	1	
E17	VEP83478A	REAR JACK P.C.BOARD	1	
E18	VEP81200E	POWER 1 P.C.BOARD	1	
E19	VEP81201C	POWER 2 P.C.BOARD	1	
E20	VEP80A58A	POWER CONNECTION P.C.B	1	
E26	VEP84303B	AUDIO JACK P.C.BOARD	1	
E27	VEP84332A	AES/EBU P.C.BOARD	1	

CHASSIS FRAME ASSEMBLY

Components identified with the mark ⚠ have the special characteristics for safety.
When replacing any of these components, use only the same type.

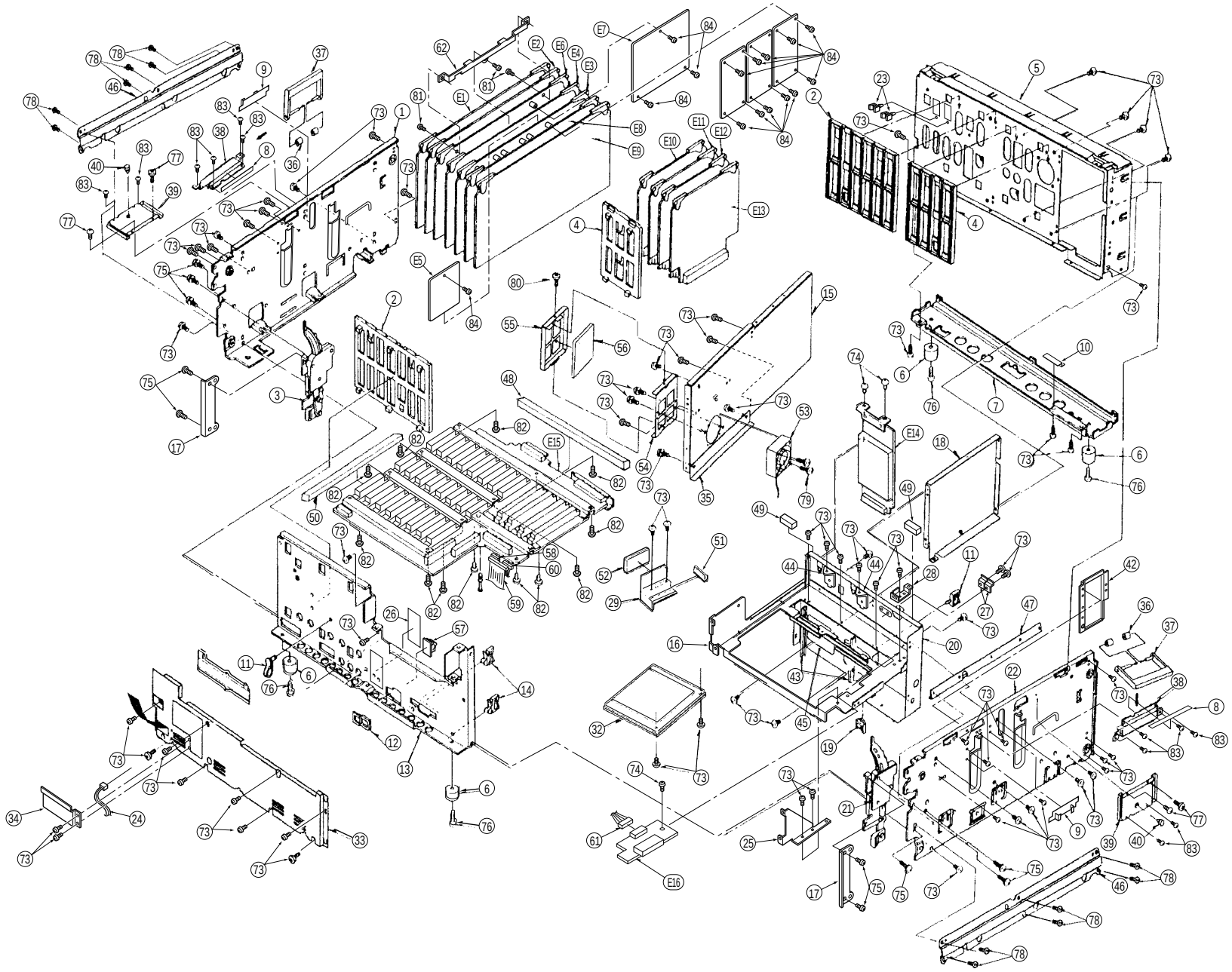

CHASSIS FRAME ASSEMBLY

Ref.No.	Part No.	Part Name & Description	Pcs	Remarks
1	VMP7417	FRAME (L)	1	
2	VGQ5645	P.C.B. GUIDE RAIL 7	2	
3	VYQ1258	ROTARY BRACKET L	1	
4	VGQ5646	P.C.B. GUIDE RAIL B	2	
5	VMP7130	REAR FRAME	1	
6	VKA0117	PLASTIC FOOT	4	
7	VMP6244	BOTTOM FRAME	1	
8	VMZ3064	HANDLE INSULATION SHEET	2	
9	VMZ3299	HANDLE INSULATION SHEET B	2	
10	VMZ3069	INSULATION SHEET	1	
11	VJF0285	WIRE LOCKING SADDLE	2	
12	VJF1259	EDGE HOLDER	1	
13	VMP7418	FRONT FRAME	1	
14	VJF0469	CLAMPER	2	
15	VMP7430	CENTER FRAME	1	
16	VXA7743	MECHA FRAME ASS'Y	1	
17	VMP7422	HOLDER ANGLE	2	
18	VMP6240	CENTER SUB FRAME	1	
19	VGQ1543	EDGE GUARD	1	
20	VMP7756	MECHA FRAME (BACK)	1	
21	VYQ1259	ROTARY BRACKET R	1	
22	VMP7416	FRAME (R)	1	
23	VJF0384	CLAMPER	2	
24	VEE0W74	5V POWER CABLE	1	
25	VMP7802	CASSETTE GUIDE HOLD ANGLE	1	
26	VGF0859	SHIELD (2)	1	
27	VMP1867	RF EARTH SPRING	2	
28	VMP7144	AC HEAD I/F ANGLE	1	
29	VMP6247	MECHA SUB REAR FRAME	1	
32	VXA6706	MECHA SHIELD PLATE	1	
33	VMP7420	FRONT SHIELD ANGLE	1	
34	VMP7421	CABLE HOLDER ANGLE	1	
35	VMP6246	CENTER SUB ANGLE	1	
36	VMX2994	HANDLE SPACER	4	
37	VKH0215	HANDLE ARM	2	
38	VMP6314	HANDLE BASE	2	
39	VGM1716	HANDLE COLLAR	2	
40	VMG1309	RUBBER BUTTON	2	
42	VMP6313	DUST PROOF	1	
43	VGQ1016	GUIDE RAIL	2	
44	VMP7424	P.C.B. HOLDER ANGLE	2	
45	VMP7120	RAIN ANGLE	1	
46	VMP6248	RACK MOUNT	2	
47	VMP6249	MOTHER ANGLE	1	
48	VMT1097	CUSHION	1	
49	VMT1043	CUSHION	2	
50	VMT1104	CUSHION	1	
51	VMT1105	CUSHION	1	
52	VMT1106	CUSHION	1	
53	VRF0202	FAN MOTOR	1	L6FAHCBH0003 (M)
54	VMP6482	FILTER CASE	1	
55	VMP6483	FILTER CAP	1	
56	VGF0861	FILTER	1	(M)
57	VJF1413	CLAMPER	1	
58	VEE0W81	MECHA CONNECTION CABLE B	1	
59	VEE9643	MECHA CONNECTION 2 CABLE	1	K1PB80B00002
60	VEE0W80	MECHA CONNECTION CABLE C	1	
61	VEE9732	AC HEAD CONNECTION CABLE	1	
62	VXA7450	SDI HOLDER ANGLE	1	
73	XTV3+6F	SCREW	73	
74	XTV3+6FFR	SCREW	3	
75	XYN3+C6	SCREW	10	
76	XYNV3+K12S	SCREW	4	
77	XYN3+F8FZS	SCREW	4	
78	XTV4+6F	SCREW	12	
79	XSN3+16FZ	SCREW	2	
80	XYN3+K6	SCREW	1	
81	XYN26+K6	SCREW	3	
82	XYE3+EF6	SCREW	12	
83	XSB3+6FZ	SCREW	12	
84	XYN26+K5	SCREW	15	

Ref.No.	Part No.	Part Name & Description	Pcs	Remarks
E1	VEP84333B	F1: A AD/DA P.C.BOARD	1	
E2	VEP84390B	F2: A PROC UDI P.C.BOARD	1	
E3	VEP83610B	F3: SDI P.C.BOARD	1	
E4	VEP83619A	F4: V PROC P.C.BOARD	1	
E5	VEP83573F	F4 SUB: UD CONV P.C.BOARD	1	
E6	VEP83580C	F5: REC PB P.C.BOARD	1	
E7	VEP83581C	F5 SUB: ECC SUB P.C.BOARD	1	
E8	VEP86335A	F6: SYSCON P.C.BOARD	1	
E9	VEP82242C	F7: SERVO P.C.BOARD	1	
E10	VEP83467E	H1: CS OUT P.C.BOARD	1	
E11	VEP84347D	H3: CUE P.C.BOARD	1	
E12	VEP85204A	H4: RF EQ P.C.BOARD	1	
E13	VEP85204B	H5: RF EQ P.C.BOARD	1	
E14	VEP85205B	HEAD BUFF P.C.BOARD	1	
E15	VEP89142A	MOTHER P.C.BOARD	1	
E16	VEP80991A	AC HEAD I/F P.C.BOARD	1	

CASING PARTS ASSEMBLY

Components identified with the mark ⚠ have the special characteristics for safety.
When replacing any of these components, use only the same type.

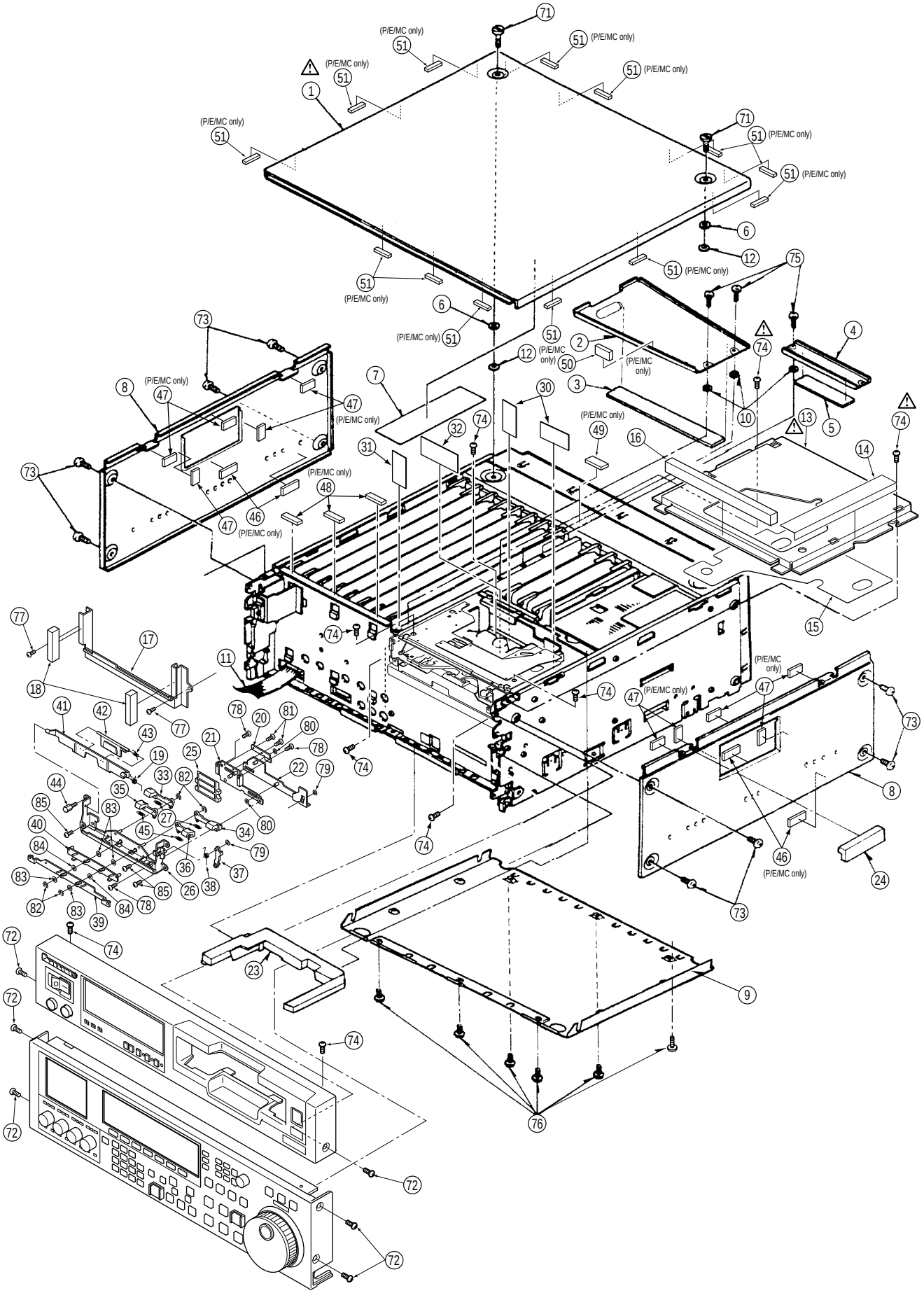

CASING PARTS ASSEMBLY

Components identified with the mark ⚠ have the special characterisitics for safety.
When replacing any of these components, use onlly the same type.

Ref.No.	Part No.	Part Name & Description	Pcs	Remarks
⚠ 1	VYP8842	TOP PLATE ASS'Y	1	
2	VMP6232	P.C.B. PLATE L	1	
3	VMT1095	P.C.B. RUBBER CUSHION B	1	
4	VMP6233	P.C.B. PLATE S	1	
5	VMT1096	P.C.B. RUBBER CUSHION S	1	
6	VMX2510	SPACER	2	
7	VMZ3351	UPPER PANEL BARRIER	1	
8	VGM1681	SIDE PANEL	2	
9	VKU0562	BOTTOM PLATE	1	
10	VMX1558	NYLON WASHER	3	
11	VEE0Y98	FRONT CABLE	1	
12	VMX2582	WASHER	2	
⚠ 13	VMP7426	CARRIGE SUPPORT ANGLE	1	
14	VGF0956	DUST PROOF CUSHION	1	
15	VMZ3320	INSULATION SHEET	1	
16	VMT0967	DUST PROOF CUSHION (C)	1	
17	VGF0989	DUST PROOF ANGL	1	
18	VMT1036	DUST PROFF CUSHION	2	
19	VMB3719	BLINDER SPRING	1	
20	VMA0P57	HOLDER PLATE	1	
21	VXA7584	STOPPER BASE ASS'Y	1	
22	VXA7585	DRIVE ROD ASS'Y	1	
23	VXA7744	DUST PROOF CUSHION ASS'Y	1	
24	VGF0816	INSULATION SHEET	1	
25	VXA7774	DOUBLE STOPPER ASS'Y	1	
26	VXA7587	GUIDE BASE ASS'Y	1	
27	VMB3785	CASSETTE GUIDE SPRING A	2	
30	VGF0858	SHIELD (1)	2	
31	VGF0859	SHIELD (2)	1	
32	VGF0799	DUST PROOF SHEET (C)	1	
33	VML3737	L CASSETTE GUIDE L	1	
34	VML3738	L CASSETTE GUIDE R	1	
35	VML3739	M CASSETTE GUIDE L	1	
36	VML3740	M CASSETTE GUIDE R	1	
37	VXL3201	CONNECTION LEVER ASS'Y	1	
38	VMB3717	CONNECTION LEVER SPRING	1	
39	VXA7588	GUIDE SLIDE LU	1	
40	VXA7589	GUIDE SLIDE MU	1	
41	VKF3661	BLINDER	1	FOR AJ-HD1700P/E
41	VKF3871	BLINDER	1	FOR AJ-HD1700MC
42	VKF3662	SUB BLINDER	1	FOR AJ-HD1700P/E
42	VKF3872	SUB BLINDER	1	FOR AJ-HD1700MC
43	VMB3718	SUB BLINDER SPRING	1	
44	VMS6278	P.C.B. POST	1	
45	VMB3814	CASSETTE GUIDE SPRING B	2	
46	VMT0779	GASKET	4	
47	VMT0873	GASKET	10	
48	VMT0797	GASKET C	3	
49	VMT0884	GASKET	1	
50	VMT1519	GASKET	1	
51	VMT0800	GASKET	13	
71	VHD0274	SCREW	2	
72	XSB3+8FZ	SCREW	6	
73	XSB4+8FC	SCREW	8	
⚠ 74	XTV3+6F	SCREW	9	
75	XYN3+K8	SCREW	3	
76	XYE3+EF6	SCREW	6	
77	XTV3+6F	SCREW	2	
78	XQN2+A2	SCREW	3	
79	VMX0967	CUT WASHER	2	
80	VMX1079	CUT WASHER	2	
81	XQN14+A14	SCREW	2	
82	XUC25FP	E-RING	4	
83	XWGV3Y6G	WASHER	4	
84	XWGV3D6G	WASHER	2	
85	XYN3+C6	SCREW	3	

PACKING PARTS ASSEMBLY

Components identified with the mark ⚠ have the special characteristics for safety.
When replacing any of these components, use only the same type.

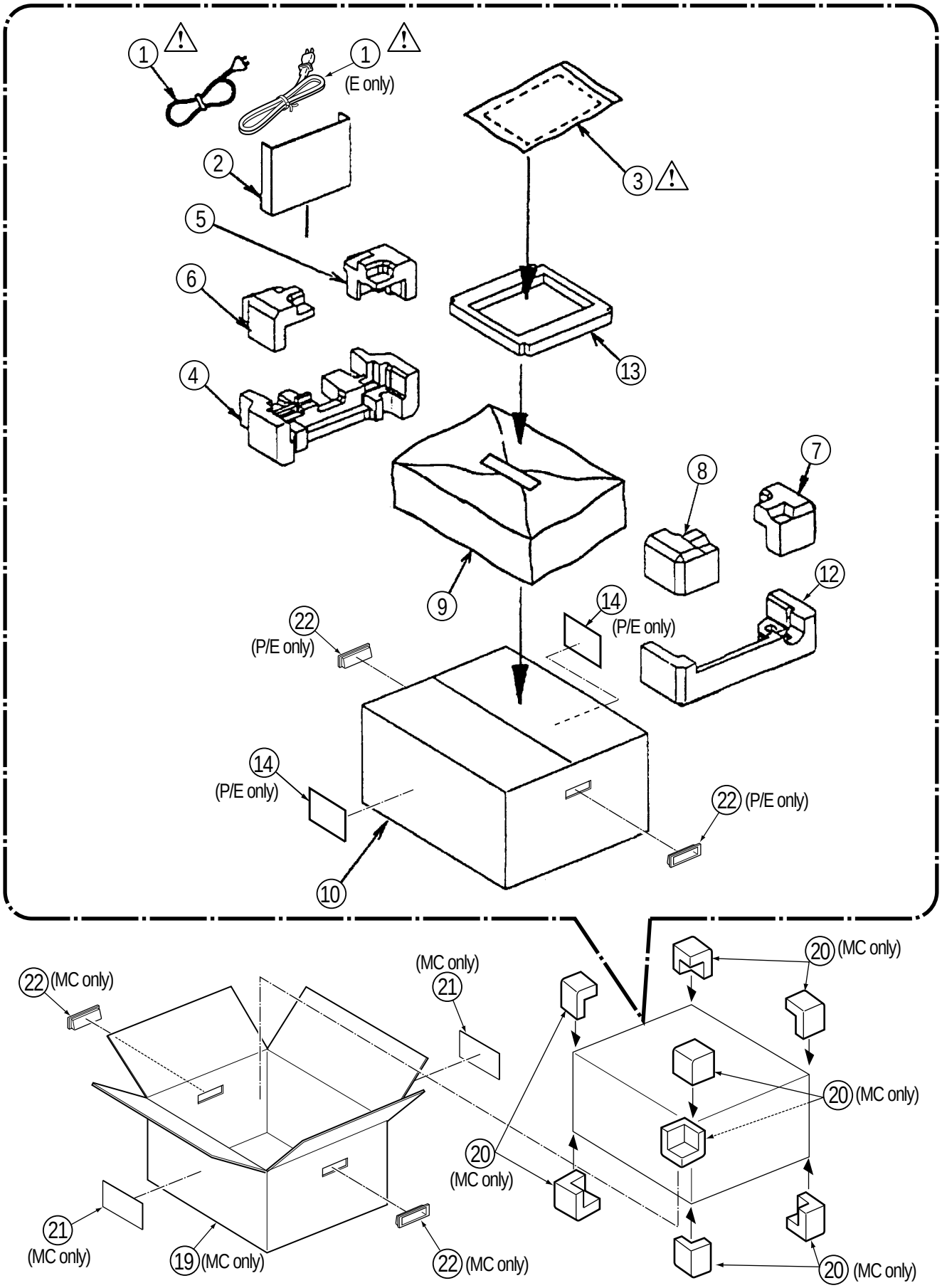

PACKING PARTS ASSEMBLY

Components identified with the mark ⚠ have the special characterisitics for safety.
When replacing any of these components, use onlly the same type.

Ref.No.	Part No.	Part Name & Description	Pcs	Remarks
⚠ 1	K2CG3CH00001	POWER CODE	1	FOR AJ-HD1700P
⚠ 1	VJA0774	POWER CODE	1	FOR AJ-HD1700E
⚠ 1	VJA0738	POWER CODE	1	FOR AJ-HD1700E
⚠ 1	VJA1166	POWER CODE	1	FOR AJ-HD1700MC
2	VPN5411	ACCESSORY PAD	1	
⚠ 3	VQT0E88	OPERATING INSTRUCTIONS	1	FOR AJ-HD1700P/E
⚠ 3	VQT0E90	OPERATING INSTRUCTIONS	1	FOR AJ-HD1700MC
4	VPN5409	CUSHION BUL	1	
5	VPN5331	CUSHION BUR	1	
6	VPN5332	CUSHION BL	1	
7	VPN5333	CUSHION FUR	1	
8	VPN5990	CUSHION FBL	1	
9	VPF0673	POLYETHYLENE BAG (SET)	1	
10	VPG0G30	PACKING CASE	1	
12	VPN5410	CUSHION FL	1	
13	VPN5394	O/I CUSHION	1	
14	VQL9821	PACKING LABEL	2	FOR AJ-HD1700P
14	VQL0A23	PACKING LABEL	2	FOR AJ-HD1700E
19	VPG0U84	PACKING CASE (OUT)	1	FOR AJ-HD1700MC
20	VPN1791	CORNER PAD	8	FOR AJ-HD1700MC
21	VQL9820	PACKING LABEL	2	FOR AJ-HD1700MC
22	VPF0149	HANDLE COVER	2	

Ref.No.	Part No.	Part Name & Description	Pcs	Remarks